ORTLOFF
ENGINEERS, LTD.

INTEGRATED LIQUIDS RECOVERY TECHNOLOGY IMPROVES LNG PRODUCTION EFFICIENCY

Presented at the

82nd Annual Convention

of the

Gas Processors Association

March 11, 2003

San Antonio, Texas

Hank M. Hudson, P.E.

John D. Wilkinson, P.E.

Kyle T. Cuellar

Michael C. Pierce

Ortloff Engineers, Ltd.

Midland, Texas

www.ortloff.com

Integrated Liquids Recovery Technology Improves LNG Production Efficiency

HANK M. HUDSON, JOHN D. WILKINSON, KYLE T. CUELLAR, and MICHAEL C. PIERCE
Ortloff Engineers, Ltd.
Midland, Texas

ABSTRACT

Most natural gas is transported from the wellhead to processing plants and thence to consumers in high pressure gas transmission pipelines. At remote locations, however, liquefying the natural gas for transport is increasingly common. The much lower volume of liquefied natural gas (LNG) relative to gaseous natural gas can reduce transportation costs by allowing delivery using cargo ships or transport trucks instead of pipelines.

Regardless of the method used to liquefy the natural gas stream, removal of a significant fraction of the heavier hydrocarbons is generally required before the stream is liquefied. The reasons for this hydrocarbon removal step are numerous, including control of the LNG heating value and the value of these heavier hydrocarbon components as products in their own right. Unfortunately, little attention has been focused heretofore on the efficiency of this step.

For more than 30 years, Ortloff has been developing technology for recovering liquids from natural gas that offers higher recovery, better efficiency, greater simplicity, and better reliability than other available processes. This natural gas liquids recovery technology can be extended to allow efficient liquids recovery in conjunction with liquefaction of the natural gas. Careful integration of the hydrocarbon removal step into the LNG liquefaction process can produce both LNG and a separate heavier hydrocarbon liquid product using significantly less energy than reported for current processes.

This paper presents the recovery and efficiency performance of the new liquids removal technology when applied to typical natural gas liquefaction cycles. Several examples illustrate the performance advantages of the new technology.

INTRODUCTION

In many locations around the world, large deposits of natural gas have been discovered where the potential production capacity far exceeds the capacity of the consumers in those regions. For those regions where there is no existing pipeline infrastructure for transporting the natural gas, liquefaction of the natural gas for subsequent transport in cargo ships or trucks can be an economical means for getting the natural gas to market. A number of large scale plants for producing liquefied natural gas (LNG) are currently under construction or in the planning stages for this purpose.

Most LNG contracts specify a range of acceptable heating values for the LNG sold into a particular market. In most cases, this requires that a certain fraction of the heavier hydrocarbon components found in the natural gas be removed prior to liquefaction so that the LNG does not exceed the upper limit on heating value. Some natural gases also require removal of the heavy ends to prevent operating problems in the liquefaction cycle, such as freezing of aromatic hydrocarbons at low temperatures.

Ortloff has been developing technology for recovering liquids from natural gas for nearly 30 years. Throughout this time, the governing principles for Ortloff technology have been higher recovery, better efficiency, greater simplicity, and better reliability than other processes available to gas processors. As a result, the Ortloff processes for liquids recovery are generally acknowledged as the state-of-the-art around the world.

The removal of the heavier hydrocarbons from the natural gas is considered to be a feed conditioning step in most existing LNG plants, and is not integrated into the overall liquefaction scheme beyond the use of some of the high-level refrigeration from the LNG cycle. During the past few years, much of the development effort at Ortloff has focused on extending our natural gas liquids recovery technology to allow efficient liquids recovery when integrated with the liquefaction of the natural gas.

Although we expected there was room for improving the efficiency of the liquids removal step in the LNG cycle, we found that improving the liquids recovery

efficiency was only part of the benefit. In fact, the overall efficiency of the **total** LNG production cycle could be significantly improved through careful integration of the hydrocarbon removal step into the LNG liquefaction process. This allows not only production of both LNG and a separate heavier hydrocarbon liquid product using significantly less energy than reported in the literature for current processes, but has the added benefit of producing a high-quality co-product to generate a second revenue stream for the facility. This paper presents the results of several case studies conducted by Ortloff to determine the recovery and efficiency performance of the new liquids removal technology when applied to typical natural gas streams.

CURRENT LIQUIDS REMOVAL TECHNOLOGY

The processing scheme used in most LNG plants is shown in block flow fashion in Figure 1. After removal of CO_2 and any sulfur compounds, the natural gas is dehydrated before entering the liquids removal section. Heavier hydrocarbons are removed from the natural gas using high-level refrigerant to provide the cooling needed to condense the liquids, and the residual gas is then liquefied using high-level and low-level refrigerant.

Figure 2 shows a typical example of the liquids removal section used in many LNG plants. The natural gas stream is cooled using high-level refrigerant to condense a portion of the stream. The cooled stream is then directed into a "wash tower" where the condensed liquid serves as reflux to absorb heavier hydrocarbons from the natural gas. The wash tower often includes a reflux condenser to minimize loss of the heavier components and a reboiler to minimize the quantity of lighter hydrocarbons co-absorbed in the tower bottoms. A second tower is typically used to strip light ends from the wash tower liquids so that only LPG (liquefied petroleum gas, C_3+ hydrocarbons) or condensate (C_4+ hydrocarbons) is extracted from the natural gas. The light ends stripped from the liquids are cooled and then recombined with the natural gas leaving the wash tower to become the feed for the liquefaction section.

There are several aspects of this wash tower operation that compromise the efficiency of the liquids removal step. Among these are:

- The wash tower operates at high pressure, causing poor separation efficiency.
- Poor separation efficiency requires further fractionation of the liquids removed.
- Rich inlet gas is a poor reflux stream for absorbing heavier hydrocarbons.
- All of the refrigeration comes from external sources, increasing power requirements.
- The external reboil heat further increases the refrigeration load.

At high pressure, the relative volatilities between the lighter components (methane and lighter, ethane and lighter, or propane and lighter, depending on the hydrocarbons to be removed) and the heavier components are not as favorable as they are at lower pressures. Consequently, the heavier hydrocarbons leaving as the bottom product of the wash tower generally contain a significant amount of lighter components that have been co-absorbed. These light ends must be stripped from the liquid product so that the liquid can be stored at a reasonable pressure, necessitating further fractionation of the wash tower bottoms to remove the light ends from the liquid. As a further consequence of the poor relative volatilities, the fractionation column must use refrigeration to generate reflux for the top of the column to avoid excessive losses of the heavier hydrocarbons.

All of the refrigeration for the wash tower is provided from an external source, typically a portion of the high-level refrigerant used for the initial cooling of the natural gas and the low-level refrigerant in the LNG cycle. This adds to the overall power consumption of the LNG plant. In addition, the reboil heat added to the system in the wash tower and the fractionation column

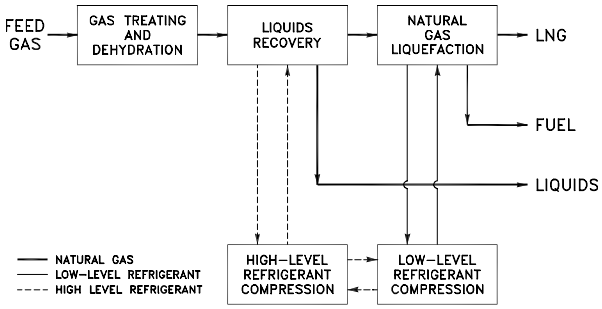

Figure 1 — Typical LNG Plant Block Flow Diagram

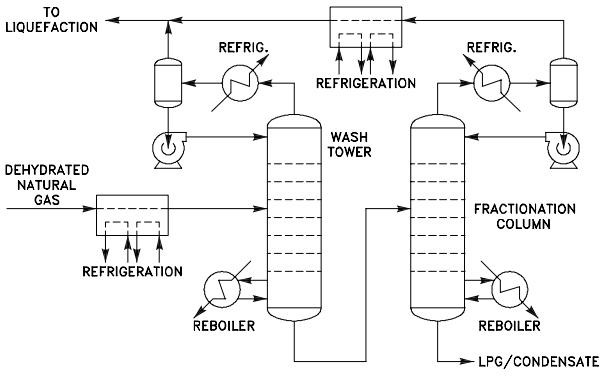

Figure 2 — Typical Liquids Recovery Section

elevates the temperature of the light ends leaving the fractionation column, requiring still more refrigeration to cool the light ends before they are recombined with the natural gas flowing to the liquefaction section.

NATURAL GAS LIQUIDS RECOVERY TECHNOLOGY

Ortloff has developed a number of processes for efficient recovery of liquids from natural gas and other gas streams.[1] These processes offer many advantages over other processes available to gas processors, most notably: higher recovery, better efficiency, greater simplicity, and better reliability.

These processes achieve higher product recoveries through the use of reflux stream(s) for the recovery column that are appropriate for the liquids to be recovered. This allows overcoming the vapor-liquid equilibrium effects that limit the recovery potential of many competing processes. Some of these processes feature dual reflux streams for use when very high product recoveries are desired.

Our liquids recovery processes provide better efficiency than other processes through the use of split-vapor process technology. This design concept separates the gas streams used for power recovery from those used to provide tower reflux, so that each can be optimized separately. The typical performance improvement is on the order of 30% greater efficiency compared to first-generation technology. As a result, retrofitting existing plants to use this technology has been quite popular.[2]

Separating the power recovery and reflux components of the process also helps simplify plant operations since it minimizes the interaction between these two aspects of the process design. This makes process optimization much easier than for many other processes, particularly for plants that are subjected to variable feed conditions and/or product economics. These processes deal with variation in the richness of the feed gas quite well, allowing much more consistent product recoveries so that the heating value of the plant residue gas remains stable despite changes in the plant feed gas.

Table 1 — Liquids Recovery Processes

Process		C_2 Recovery		C_3 Recovery	
		Ultra-Hi	High	Ultra-Hi	High
CRR	**C**old **R**esidue **R**eflux	✓		✓	
RSV	**R**esidue **S**plit-**V**apor	✓		✓	
RSVE	**R**esidue **S**plit-**V**apor w/ **E**nrichment		✓		✓
GSP	**G**as **S**ubcooled **P**rocess		✓		✓
SFR	**S**plit-**F**low **R**eflux		✓	✓	
SRP	**S**upplemental **R**ectification **P**rocess		✓	✓	
IOR	**I**mproved **O**verhead **R**ecycle			✓	
SCORE	**S**ingle **C**olumn **O**verhead **RE**cycle			✓	
CORE	**C**ascade **O**verhead **RE**cycle			✓	
OHR	**O**ver**H**ead **R**ecycle				✓

The capabilities of some of these liquids recovery processes are summarized in Table 1. As can be seen, some processes are best suited for NGL recovery (natural gas liquids, generally C_2+ hydrocarbons), some for LPG recovery, and some can be used efficiently for either. These processes have been used in gas plants ranging in size from as small as 0.3×10^6 m^3/D [10 MMSCFD] to as large as 60×10^6 m^3/D [2,100 MMSCFD]. These sizes bracket the gas processing capacity of all existing LNG trains and all of those currently in the construction or planning stages. For reference, a feed rate of 7×10^6 metric tonnes per year (t/Y) to an LNG plant equates to about 23×10^6 m^3/D [800 MMSCFD] of natural gas entering the plant.

INTEGRATED LIQUIDS RECOVERY TECHNOLOGY

A block diagram for the Ortloff integrated LNG and liquids recovery process is shown in Figure 3. Depending on the particular process configuration used in the liquids recovery section and the desired recovery level for the co-product liquid stream, the treated and dehydrated natural gas feedstock is cooled using a combination of high-level refrigerant, a slipstream of low-level refrigerant, and/or process streams, followed by processing for liquids recovery. The resulting methane-rich residue gas then flows to the liquefaction section at relatively low temperature and relatively high pressure to be liquefied to form the LNG stream.

For most of the process configurations used in the liquids recovery section, a slipstream of low-level refrigerant is used to supply a portion of the process cooling. For some of the configurations, one or more of the process streams generated within the liquids recovery section can be used to cool low-level refrigerant rather than supply process cooling directly. At lower recovery levels there is generally a surplus of cooling available from the liquids recovery process, which is used to supplement the pre-cooling of the low-level mixed refrigerant.

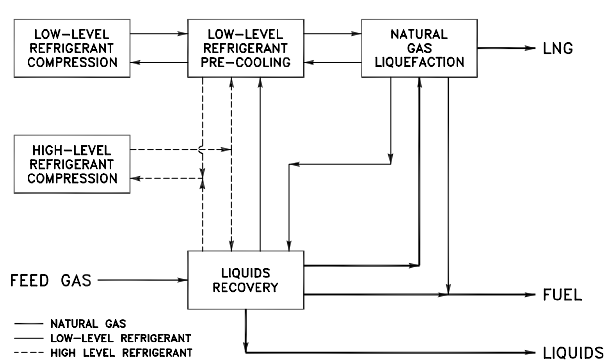

Figure 3 — Integrated LNG and Liquids Recovery

This integrated processing scheme offers several notable advantages over the liquids recovery technology used in current LNG plants:

- Liquids recovery occurs at intermediate pressure, providing better separation efficiency.
- Better separation efficiency eliminates the need for supplemental fractionation.
- Better reflux streams are utilized, minimizing the loss of the desired heavier hydrocarbons.
- Power recovery is used to generate refrigeration within the liquids recovery process.
- A second high-quality liquid product is recovered for sale, enhancing project economics.
- Liquid recovery can be tailored to match the circumstances of each particular project.

By performing the liquids recovery at an intermediate pressure, the relative volatilities between the lighter hydrocarbons and the heavier hydrocarbons are much more favorable. This makes it possible to capture the desired heavier hydrocarbons with minimal co-absorption of the lighter hydrocarbons, eliminating the need to provide a supplemental fractionation column like that required by the wash tower technology of Figure 1. The separation efficiency is further improved by properly matching the composition of the reflux stream(s) to the hydrocarbons to be captured so that vapor-liquid equilibrium effects do not limit the recovery of the heavy hydrocarbons.

Since the separation is accomplished at an intermediate pressure, work expansion machines (i.e., turboexpanders) can be used to generate part of the refrigeration for the liquids recovery process. This has two very desirable effects on the overall process efficiency. First, the refrigeration provided by work expansion directly eliminates external refrigeration that would otherwise be required to condense the co-product liquid stream. Second, the recovered power can be used to partially re-pressurize the methane-rich overhead gas, so that condensation of the gas stream in the liquefaction section requires less refrigeration. Both factors result in significantly reducing the amount of external refrigeration required in the LNG plant.

The composition of the co-product liquid stream from the liquids recovery section can be matched to the circumstances of a particular LNG project by selecting the appropriate processing scheme. In locations that have a market for ethane, an NGL product can be produced from the liquids recovery section to feed ethylene plants, etc. If there is no market for ethane, an LPG product can be produced instead to supply the local chemical, heating, or fuels markets. Or, if the only need is to control the heating value of the LNG, a condensate product for the local liquid fuels market can be produced. And, for locations where future development may create a market for lighter liquids, or where demand for products fluctuates, processes suitable for variable liquid co-product production can be selected. In all cases, the liquid co-product is controlled to meet the appropriate specification for hydrocarbon liquid streams (i.e., C_1:C_2 ratio for NGL streams, C_2:C_3 ratio for LPG streams, etc.).

CASE STUDIES

To illustrate the advantages of integrating the liquids recovery section with the liquefaction section of an LNG plant, several Case Studies are presented in the remainder of this paper. For the purposes of these Case Studies, it was assumed that one gas turbine drives the high-level refrigerant compressors and the second turbine drives the low-level refrigerant compressors. In order to balance the load between the two gas turbines and fully utilize their available power, it was further assumed that both gas turbines are also coupled to starter/helper motor-generators to allow sharing the load equally between the two drivers by generating electricity with the more lightly loaded turbine to supplement the power provided by the more heavily loaded turbine.

With the two gas turbines electrically coupled in this fashion, it is possible to drive the other major rotating equipment in the facility (pumps, overhead compressors, etc.) using some of the electric power generated by the one gas turbine. Similarly, the two hydraulic turbines (on the high pressure mixed refrigerant stream and LNG stream) can drive generators to supplement the power produced by the gas turbines. Thus, the production rate for each case studied was adjusted to fully use the power available from the two gas turbines to drive all of the rotating equipment in the liquids recovery and LNG liquefaction sections. (If the other rotating equipment is instead driven by a separate source of power, the increase in power available for refrigeration would allow increasing the production rate accordingly.)

Fuel gas for the gas turbines driving the refrigerant compressors was assumed to be withdrawn from one or more methane-rich streams in the liquids recovery section, prior to feeding the liquefaction section of the plant. The fuel gas withdrawal rate was set by the power requirements of the compressors, assuming a turbine fuel rate of 11.32 MJ/kW-H [8,000 BTU/HP-H]. Any fuel gas consumed by other plant systems (such as regeneration gas heaters, auxiliary boilers, and/or amine reboilers) was <u>not</u> included when determining the fuel gas withdrawal rate.

Case Study 1 — C3MR LNG Cycle

This first case study is based on liquefaction of a natural gas stream similar to that described previously in the literature.[3] The LNG liquefaction section uses a mixed refrigerant to supply the low-level refrigeration, with propane refrigeration used for the initial chilling of the natural gas and for pre-cooling of the mixed refrigerant. This is commonly referred to as a C3MR cycle. The pertinent parameters for the study are summarized in Table 2.

The liquid co-product produced for each of the cases in the study varied depending on the desired level of liquids removal. For cases producing C_2+ NGL, the C_1:C_2 ratio in the liquid was controlled to a typical NGL specification. For cases producing C_3+ LPG, a C_2:C_3 ratio consistent with producing commercial-quality propane in downstream fractionation was used. Similarly, for cases producing condensate, a C_3:C_4 ratio consistent with producing commercial-quality butane in downstream fractionation was used.

The LNG production rate for each case examined was set by assuming that two General Electric MS7001EA gas turbine drivers provide the refrigeration for the liquefaction cycle, with the power available based on 28.5°C [83.3°F] ambient air. No power recovery from the waste heat in the gas turbine exhaust was assumed. (Approximately 30-35 MW of power per gas turbine could be generated using an absorption refrigeration system, a closed-loop hydrocarbon refrigeration cycle, or a simple steam cycle, **but no credit has been taken for this in the specific power consumption values given later**.)

Commercial-quality propane refrigerant in a closed vapor-compression refrigeration cycle was used to supply high-level cooling for the liquids recovery section and pre-cooling of the low-level mixed refrigerant. All of the simulation models used a relatively simple propane system with three pressure levels for the propane evaporators (process chillers). The pressure levels for a particular simulation were set by the specific cooling requirements of the process selected.

Table 2 — Process Parameters for Case Study 1

Natural Gas		Heat Sink for Cooling	
Component	Mole Percent	Cooling Medium	ambient air
Nitrogen	0.12	Temperature	28.5°C [83.3°F]
Methane	86.05		
Ethane	6.40	Refrigeration Drivers	
Propane	4.25	Gas Turbine	GE Frame 7
i-Butane	1.18	Number Used	2
n-Butane	1.17	Power per Turbine	76,266 kW
i-Pentane	0.31	Waste Heat Recovery	none assumed
n-Pentane	0.30		
Hexane Plus	0.22	Liquefaction Cycle	
Total	100.00	C3MR (3-stage propane cycle)	
Temperature	22.0°C [71.6°F]		
Pressure	57.7 bar(a) [837 PSIA]		

The mixed refrigerant streams used in the simulation models are multi-component mixtures of nitrogen, methane, ethane, and heavier hydrocarbons. The particular composition (as well as the number of components) was adjusted for each particular simulation to achieve a good match between the condensation of the process streams and the evaporation of the mixed refrigerant stream. For most of the process configurations used in the liquids recovery section, a slipstream of mixed refrigerant was used to supply a portion of the process cooling. At the lower recovery levels there is generally a surplus of cooling available from the liquids recovery process, which was used to supplement the pre-cooling of the mixed refrigerant.

The degree of subcooling of the LNG stream was set so that the temperature of the LNG after the pressure reduction step (to storage pressure) was slightly below the bubble point temperature of the stream and no flash vapor was predicted. In practice, a gas recovery system will be needed to capture the boil-off vapor from the LNG storage tank(s), but this detail was not included in the process simulations for this study.

Six different cases were modeled with varying levels of co-product liquid recovery. Two NGL recovery cases were run, one for ultra-high (95%) ethane recovery and one for high (85%) ethane recovery. Similarly, two LPG recovery cases were run, one for high (95%) propane recovery and one for medium (88%) propane recovery. Two condensate recovery cases were run, one for high (92%) butane recovery and one for low (72%) butane recovery. The results of these cases are summarized in Table 3. (The annual production rates given in this table and all of the tables that follow are based on operating 8,760 hours per year. Although it is typical to de-rate the production capacity, the assumed on-stream factor for LNG plants appears to vary from company to company. For ease of reference, no such de-rating was included in the study results.)

In the article cited, the data presented give values ranging from 290 kW-H/t to 336 kW-H/t for the specific power consumption of an LNG plant using a C3MR cycle. As shown in Table 3, the specific power consumptions of the integrated designs are 20% to 35% lower than this range.

Table 3 — Results for Case Study 1

		NGL Product		LPG Product		Condensate Product	
		Ultra-Hi	High	High	Medium	High	Low
C_2 Recovery		95.0%	85.0%	---	---	---	---
C_3 Recovery		100.0%	96.4%	95.2%	87.9%	---	---
C_4 Recovery		100.0%	98.9%	100.0%	99.9%	92.5%	71.7%
C_5+ Recovery		100.0%	99.8%	100.0%	100.0%	99.6%	98.8%
Feed Gas	10^6 t/Y	6.23	6.38	6.19	6.24	6.06	6.24
LNG	10^6 t/Y	4.11	4.30	4.68	4.77	5.16	5.42
Liquids	10^6 t/Y	1.82	1.77	1.20	1.17	0.60	0.52
Total Liquid	10^6 t/Y	5.92	6.07	5.89	5.94	5.76	5.94
LNG HHV	MJ/Sm^3	37.8	38.1	39.7	39.9	42.3	42.7
Specific Power	kW-H/t	**225.5**	**219.9**	**227.0**	**225.0**	**232.0**	**225.0**

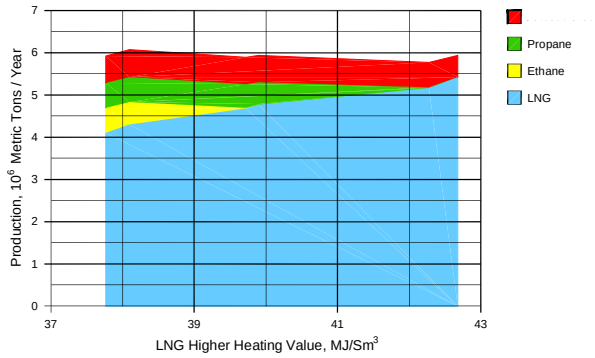

Figure 4 — Production vs. HHV for Case Study 1

Figure 4 displays these results in graphical form, giving the liquid production rate as a function of the LNG higher heating value (HHV). The nearly constant total liquid production, regardless of the degree of heavier hydrocarbon removal, is not as surprising when you consider that all of the gas must be liquefied as either LNG or liquid product. In past installations, however, the processes used for liquids recovery have not been particularly efficient and have not allowed for good heat integration with the liquefaction cycle. The new liquids removal technology addresses both of these limitations, allowing efficient liquids production regardless of the makeup of the co-product liquid stream.

Case Study 2 — DMR LNG Cycle

The second case study is based on liquefaction of the same natural gas stream as that in Case Study 1. For this case study, however, the LNG liquefaction section uses a second mixed refrigerant rather than propane to supply the initial chilling of the natural gas and the pre-cooling of the first mixed refrigerant. This is commonly referred to as a DMR (dual mixed refrigerant) cycle. The pertinent parameters for the study are summarized in Table 4.

Six cases with the same levels of co-product liquid recovery as Case Study 1 were modeled. The only difference was the use of a simple mixed refrigerant cycle to supply the high-level cooling in these simulations. The results of these cases are summarized

Table 4 — Process Parameters for Case Study 2

Natural Gas		Heat Sink for Cooling	
Component	Mole Percent	Cooling Medium	ambient air
Nitrogen	0.12	Temperature	28.5°C [83.3°F]
Methane	86.05		
Ethane	6.40	Refrigeration Drivers	
Propane	4.25	Gas Turbine	GE Frame 7
i-Butane	1.18	Number Used	2
n-Butane	1.17	Power per Turbine	76,266 kW
i-Pentane	0.31	Waste Heat Recovery	none assumed
n-Pentane	0.30		
Hexane Plus	0.22	Liquefaction Cycle	
Total	100.00	DMR (dual mixed refrigerant cycle)	
Temperature	22.0°C [71.6°F]		
Pressure	57.7 bar(a) [837 PSIA]		

Table 5 — Results for Case Study 2

		NGL Product		LPG Product		Condensate Product	
		Ultra-Hi	High	High	Medium	High	Low
C_2 Recovery		95.0%	85.0%	---	---	---	---
C_3 Recovery		100.0%	96.4%	95.2%	87.9%	---	---
C_4 Recovery		100.0%	98.9%	100.0%	99.9%	92.5%	71.7%
C_5+ Recovery		100.0%	99.8%	100.0%	100.0%	99.6%	98.8%
Feed Gas	10^6 t/Y	6.62	6.82	6.54	6.64	6.42	6.62
LNG	10^6 t/Y	4.39	4.62	4.96	5.09	5.49	5.76
Liquids	10^6 t/Y	1.93	1.89	1.27	1.24	0.63	0.55
Total Liquid	10^6 t/Y	6.32	6.51	6.23	6.34	6.12	6.31
LNG HHV	MJ/Sm^3	37.8	38.1	39.7	39.9	42.3	42.7
Specific Power	kW-H/t	**211.4**	**205.1**	**214.4**	**210.9**	**218.4**	**211.8**

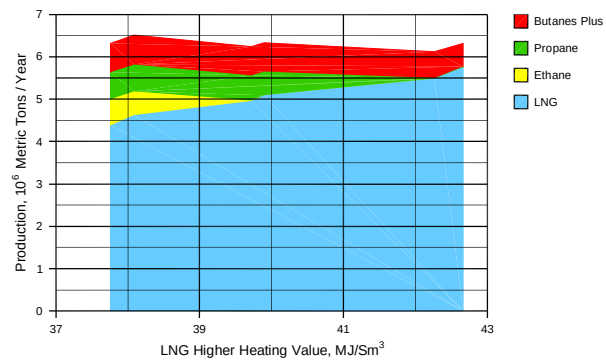

Figure 5 — Production vs. HHV for Case Study 2

in Table 5 and shown graphically in Figure 5. Again, the liquid production rate is nearly constant regardless of the degree of heavy hydrocarbon removal. For comparison, the values for the specific power consumption computed from the data given in the previously cited article ranged from 259 kW-H/t to 290 kW-H/t for an LNG plant using a DMR cycle. As shown in Table 5, the integrated designs have specific power consumptions that are 16% to 29% lower than this range.

Case Study 3 — DMR LNG Cycle with Flash Gas Recovery

Case Study 3 is based on a leaner natural gas stream than the first two Case Studies that also contains a significant fraction of inert gases (nitrogen and lighter). A DMR cycle was also used for this Case Study, with the addition of a flash gas recovery system to capture the residual vapor from the final LNG flash-down and compress it to sufficient pressure so that it can used as fuel gas in the LNG plant. The pertinent parameters for the study are summarized in Table 6.

The LNG production rate for each case examined was set by assuming that two General Electric MS7001EA gas turbine drivers provide the refrigeration for the liquefaction cycle, with the power available based on 38°C [104.4°F] ambient air. As before, no power recovery from the waste heat in the gas turbine exhaust was assumed, **and no credit has been taken for this in the specific power consumption values given later**.

Table 6 — Process Parameters for Case Study 3

Natural Gas		Heat Sinks for Cooling	
Component	Mole Percent	Cooling Medium	ambient air
Nitrogen/Helium	3.91	Temperature	38°C [100.4°F]
Methane	87.20		
Ethane	5.50	Cooling Medium	cooling water
Propane	2.02	Temperature	35°C [95.0°F]
i-Butane	0.34		
n-Butane	0.54	Refrigeration Drivers	
i-Pentane	0.17	Gas Turbine	GE Frame 7
n-Pentane	0.14	Number Used	2
Hexane Plus	0.18	Power per Turbine	71,260 kW
Total	100.00	Waste Heat Recovery	none assumed
Temperature	25.5°C [78°F]	Liquefaction Cycle	
Pressure	65.5 bar(a) [950 PSIA]	DMR with flash gas compression	

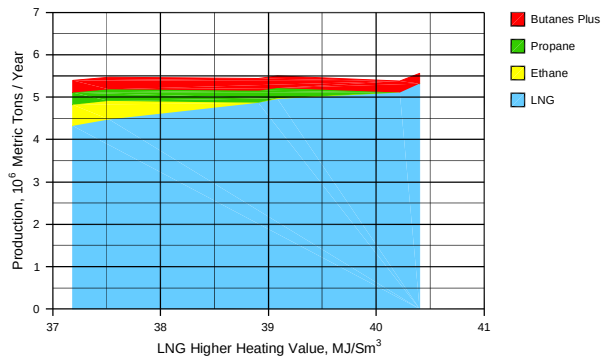

Figure 6 — Production vs. HHV for Case Study 3

The degree of subcooling of the high pressure LNG stream was adjusted for each case so that the flash gas formed during the pressure reduction step (to storage pressure) was slightly less than the fuel requirements for the gas turbines driving the refrigerant compressors. This flash gas was compressed to a suitable pressure for use as turbine fuel, then mixed with a small supplemental stream of methane-rich gas from the liquids recovery section as needed to balance the turbine fuel requirements. In practice, a gas recovery system will also be needed to capture the boil-off vapor from the LNG storage tank(s), but this detail was not included in the process simulations for this study.

Six different cases were modeled with varying levels of co-product liquid recovery. Two NGL recovery cases were run, one for ultra-high (95%) ethane recovery and one for medium (80%) ethane recovery. Similarly, two LPG recovery cases were run, one for ultra-high (99%) propane recovery and one for medium (85%) propane recovery. Two condensate recovery cases were run, one for high (90%) butane recovery and one for low (70%) butane recovery. The results of the cases are summarized in Table 7.

On average, the specific power consumptions in Case Study 3 are about 8% higher than those for the corresponding cases in Case Study 2. This is partly due to the leaner natural gas stream (which generally requires more refrigeration per unit of liquid production) and partly due to the power required for flash gas compression. This, together with the lower power available from the Frame 7 turbines due to the higher ambient air temperature, results in lower liquid production as shown in Figure 6. Nevertheless, the specific power values are still significantly lower than those reported in the literature, on the order of 10% to 23%.

Table 7 — Results for Case Study 3

		NGL Product		LPG Product		Condensate Product	
		Ultra-Hi	Medium	Ultra-Hi	Medium	High	Low
C_2 Recovery		95.0%	80.2%	---	---	---	---
C_3 Recovery		100.0%	96.4%	99.2%	84.9%	---	---
C_4 Recovery		100.0%	98.9%	100.0%	99.9%	90.5%	70.4%
C_5+ Recovery		100.0%	99.8%	100.0%	100.0%	99.2%	95.4%
Feed Gas	10^6 t/Y	5.91	6.00	5.95	6.02	5.90	6.08
LNG	10^6 t/Y	4.32	4.48	4.86	4.97	5.11	5.32
Liquids	10^6 t/Y	1.07	1.00	0.58	0.54	0.28	0.24
Total Liquid	10^6 t/Y	5.39	5.48	5.44	5.51	5.39	5.56
LNG HHV	MJ/Sm^3	37.2	37.5	38.9	39.1	40.2	40.4
Specific Power	kW-H/t	**231.3**	**227.7**	**229.5**	**226.7**	**231.8**	**224.7**

CONCLUSIONS

The value for the specific power consumption of LNG plants is reported in the literature to range from 259 kW-H/t to 336 kW-H/t. We believe that with proper process selection and heat integration between the liquids recovery and the liquefaction steps, a considerable reduction in the power consumption can be accomplished.

As shown in the Case Studies presented in this paper, the specific power consumption using fully integrated liquids recovery technology ranges from **205** kW-H/t to **233** kW-H/t depending on the type of liquid co-product produced in tandem with the LNG and the type of liquefaction cycle used. These values are based on relatively simple C3MR and DMR liquefaction cycles, and could be further reduced using more sophisticated cycles, cascade refrigeration, or some of the other more recent developments in liquefaction technology.

The benefits of integrating the liquids recovery technology with the LNG liquefaction cycle are three-fold:

(1) Changes in feed gas composition have much less impact on the liquefaction section because the liquids recovery section can maintain its removal efficiency over a wide range of compositions.

(2) The co-product liquid stream can be tailored to optimize the cash flow for a particular project by producing an NGL stream, an LPG stream, or a condensate stream to serve as feedstock for chemical manufacturing, domestic heating fuel, or liquid fuel refineries.

(3) Lower specific power consumption means that larger train sizes are possible for a given driver selection. For instance, a 6.8 million metric ton liquefaction train is possible using a pair of Frame 7 drivers. With inlet air chilling on the gas turbines, the train size could be as large as 7.6 million metric tons.

Process configurations are available to provide maximum efficiency for a given product, or to allow efficient adjustment of the product recovery levels if the product consumption and/or economics may be variable. The process efficiency and heat integration provided by this liquids recovery technology allows choosing the appropriate hydrocarbon liquid recovery level with minimal impact on the overall power consumption.

This liquids removal technology can be easily integrated into any type of natural gas liquefaction cycle. This means that all of the liquefaction cycles in use today can benefit from this technology, and that the choice of liquefaction cycle can be made independently of the recovery level desired in the liquids recovery section. This degree of flexibility should help to simplify the design and optimization of new LNG plants. It is also likely that existing LNG plants can be retrofitted to use this technology to raise the liquids recovery efficiency, increase plant throughput, or both.

REFERENCES CITED

1. Wilkinson, John D., Hudson, Hank M., Cuellar, Kyle T., And Pitman, Richard N., "Next Generation Processes for NGL/LPG Recovery", Hydrocarbon Engineering, May 2002.

2. Lynch, Joe T. and Pitman, Richard N., "Texas Plant Retrofit Improves Throughput, C_2 Recovery", Oil & Gas Journal, June 3, 1996.

3. Nibbelke, Ron, Kauffman, Steve, and Pek, Barend, "Liquefaction Process Comparison of C3MR and DMR for Tropical Conditions", Proceedings of the 81st GPA Annual Convention, Dallas, Texas, March 11-13, 2002.